www.LionTutors.com

SCM 301 Sees – Final Exam – Practice Exam Solutions

1. **D –** All of the above

2. **C –** 93%

$$\% \boldsymbol{of\ Perfect\ Orders} = \mathbf{100\%}\left(\frac{\boldsymbol{Total\ orders - Orders\ with\ \geq 1\ defect}}{\boldsymbol{Total\ orders}}\right)$$

$$\% \ of\ Perfect\ Orders = 100\%\left(\frac{2{,}000{,}000 - (100{,}000 + 50{,}000)}{2{,}000{,}000}\right)$$

$$= 100\%\left(\frac{1{,}850{,}000}{2{,}000{,}000}\right) = 100\%(0.925) = \ 92.5\% = 93\%$$

3. **B –** Public warehousing

4. **C –** Highway

5. **B –** Remanufactured

6. **B –** Project

© LionTutors 2019

7. **C –** Activity C

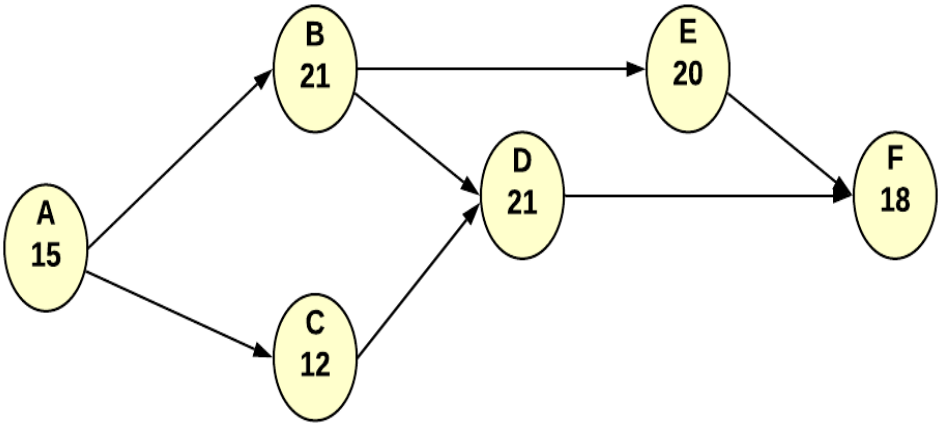

Network Paths
A-B-E-F – 15 + 21 + 20 + 18 = 74
A-B-D-F – 15 + 21 + 21 + 18 = 75
A-C-D-F – 15 + 12 + 21 + 18 = 66
The longest path through the network is the critical path. Therefore, the critical path is A-B-D-F, so answer choice C, activity C, is the only activity that isn't on the critical path.

8. **D –** All of the above

9. **D –** Increase sales

10. **B –** Water

11. **E –** All of the above

© LionTutors 2019

12. **A –** 45

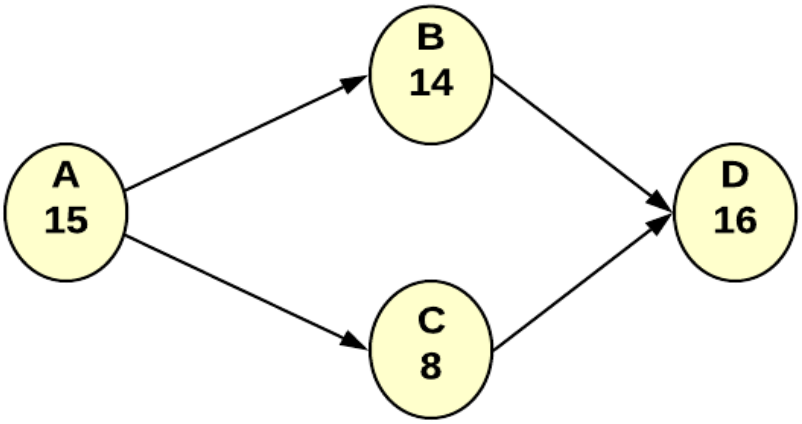

Network Paths
A-B-D – 15 + 14 + 16 = 45
A-C-D – 15 + 8 + 16 = 39
The critical path is A-B-D because it is the longest network path. The duration of a project is always equal to the duration of the critical path.

13. **E –** All of the above

14. **A –** Air

15. **E –** All of the above

16. **B –** Key points in a project, such as when a major phase should be completed, are referred to as the scope of the project

    These are milestones.

17. **C –** Planning phase

© LionTutors 2019

Use the Following Work for the Next Three Solutions

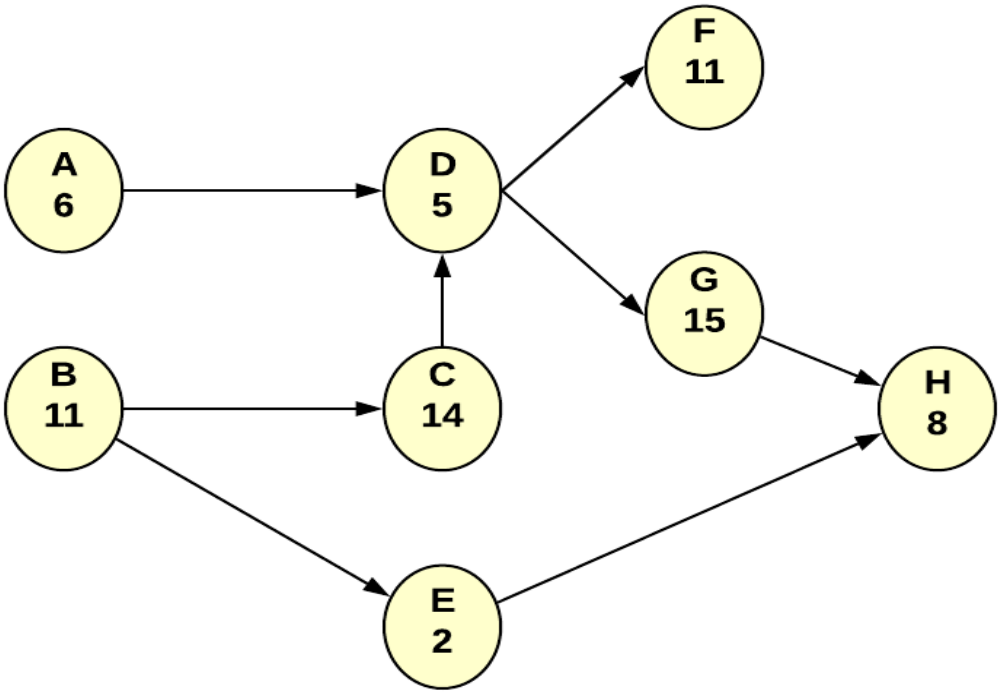

Network Paths
A-D-F – 6 + 5 + 11 = 22
A-D-G-H – 6 + 5 + 15 + 8 = 34
B-C-D-F – 11 + 14 + 5 + 11 = 41
B-C-D-G-H – 11 + 14 + 5 + 15 + 8 = 53 – CRITICAL PATH
B-E-H – 11 + 2 + 8 = 21

18. **C –** B-C-G-H

19. **E –** B-C-D-G-H

20. **E –** 53 days

21. **B –** Traditional systems are less complex to initiate than internet systems

22. **A –** True

23. **A –** $18,500

© LionTutors 2019

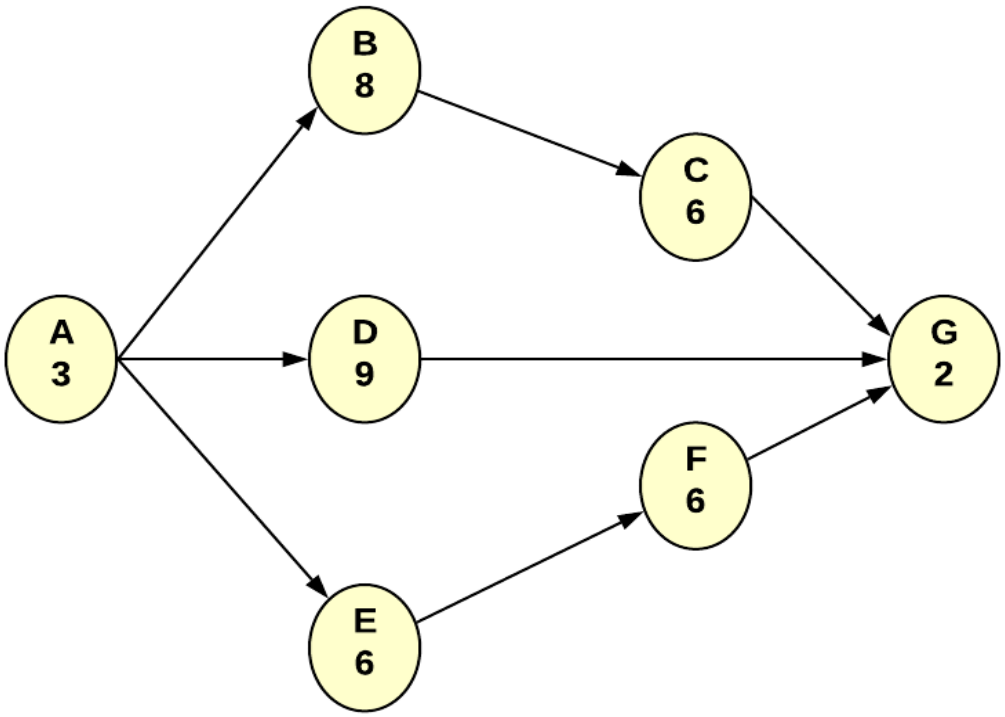

1. List all network paths and their current lengths
A-B-C-G – 3 + 8 + 6 + 2 = 19
A-D-G – 3 + 9 + 2 = 14
A-E-F-G – 3 + 6 + 6 + 2 = 17
2. Focus on the critical path or paths – Choose the activities that will shorten all critical paths at the least cost

We'll focus on A-B-C-G first since it is the critical path and we'll want to crash the activity (A, B, C, or G) with the lowest cost first. We're unable to crash A at all. The fixed cost/day for the project is $1,000, so we would never consider crashing an activity with a crash cost that is greater than or equal to the fixed cost of $1,000. This means we won't ever want to crash activity C. Choosing from activities B and G, we'll want to crash B first because the crash cost is $800/day compared to $900/day for G. Activity B can be reduced by a maximum of 3 days. However, if B were crashed for 3 days, the activity path A-B-C-G would then have a length of 16 days which would fall below the length of activity path A-E-F-G. Since activity B is not on path A-E-F-G, we will only crash B for 2 out of the possible 3 days. We can still crash activity B by one more day in the future, if necessary.
<u>Crash B 2 days @ $800/day = 2 * $800 = $1,600</u>
3. Recalculate the lengths of <u>all</u> paths
The new path lengths are as follows:
A-B-C-G = 19 – 3 = 17
A-D-G = 14
A-E-F-G = 17

© LionTutors 2019

After crashing activity B for 2 days, we have two critical paths (A-B-C-G and A-E-F-G). This means we'll only move forward with crashing the project if we're able to crash an activity that **both paths share**, because we will **never** crash an activity that isn't on the critical path. Both paths have activity G and it's possible to crash activity G for 1 day for $900.
Crash G 1 day @ $900/day = $900
The new path lengths are as follows:
A-B-C-G = 16 – 1 = 16
A-D-G = 14 – 1 = 13
A-E-F-G = 16 – 1 = 16

We still have A-B-C-G and A-E-F-G as our critical paths with lengths of 15 days and this is as far as we're going to be able to crash this project. Many people ask why we wouldn't crash activity E for 1 day at $400/day. Remember, **we only ever crash activities that are on our critical path**. Crashing activity E by 1 day would make path A-E-F-G a day shorter; however, the overall project would still take 15 days, because A-B-C-G can't be crashed any further. We never crash an activity that isn't on the critical path because doing does not shorten the length of the overall project. It only adds costs.
The question asked for the minimum completion cost for the project. Remember that we have two components that make up the total cost of this project, the fixed cost per day and the crash cost.
Total crash cost = $1,600 + $900 = $2,500
Cost of project = $1,000/day * 16 days = $16,000
Minimum completion cost for project = $2,500 + $16,000 = **$18,500**

24. **E –** All of the above

25. **B –** Water

26. **C –** Logistics

27. **C –** Gantt chart

28. **D –** 75 days

We must use the Program Evaluation and Review Technique (PERT) method anytime there are multiple time estimates for each activity. We can find the expected time for each activity (t) from the following formula:

$$\frac{t = a + 4m + b}{6}$$

t – Expected time

© LionTutors 2019

a – Most optimistic estimate of time
m – Most likely estimate of time
b – Most pessimistic estimate of time
6 – Is a constant

tA = (5 + (4*35) + 95) / 6 = 40
tB = (10 +(4*25) + 70) / 6 = 30
tC = (2.5 +(4*12.5) + 37.5) / 6 = 15
tD = (5 +(4*17.5) + 45) / 6 = 20
tE = (7.5 +(4*30) + 52.5) / 6 = 30
tF = (12.5 +(4*20) + 57.5) / 6 = 25
Once we have our most likely time estimates for each activity (t), we create a network diagram the same way that we do when using the Critical Path Method (CPM).

© LionTutors 2019

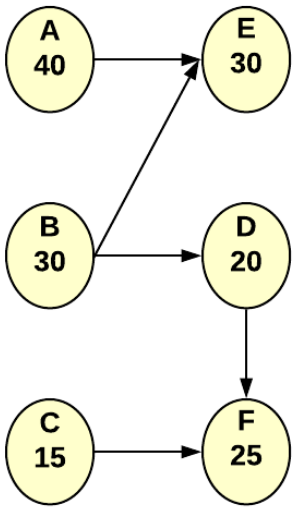

<u>Network Paths</u>
A-E – 40 + 30 = 70
B-E – 30 + 30 = 60
B-D-F – 30 + 20 + 25 = 75
C-F – 15 + 25 = 40
29. **A –** 91.2%

0.98*0.99*0.94*1.00 = 0.911988
0.911988*100 = 91.1988% = 91.2%
30. **A –** Consolidation warehousing

31. **D –** Rail

32. **A –** True

© LionTutors 2019

33. **B –** Near (4,5)

$$X^* = \frac{\sum_{i=1}^{I} W_i X_i}{\sum_{i=1}^{I} W_i} \qquad Y^* = \frac{\sum_{i=1}^{I} W_i Y_i}{\sum_{i=1}^{I} W_i}$$

Sum of weights = 25 + 13 + 6 + 4 = 48

X = [(3*25) + (5*13) + (8*6) + (1*4)] / 48
X = (75 + 65 + 48 + 4) / 48
X = 4

Y = [(7*25) + (2*13) + (4*6) + (5*4)] / 48
Y = (175 + 26 + 24 + 20) / 48
Y = 5.10

34. **B –** A critical path is composed entirely of critical activities

35. **C –** Transport

36. **A –** Air carrier

37. **C –** Create products that can be easily disposed

38. **C –** Network-based approaches allow users to see predecessors, which makes it possible to find the critical path

39. **C –** Crashing a project is an effort to shorten the overall duration of a project by reducing the amount of time that it takes to perform certain activities

40. **B –** Cross-docking

41. **C –** Postponement warehousing

© LionTutors 2019

42. **C –** Motor carriers have the best overall service level of all of the transportation modes

43. **D –** If a company hopes to be competitive, the successful completion of projects and ongoing business operations is critical

44. **E –** Warehousing

45. **E –** They are all basic warehousing operations

46. **C –** Crashing a project is an effort to shorten the overall duration of a project by reducing the amount of time that it takes to perform certain activities

47. **C –** Set the warehouse up with primary flow, meaning everything is moving in the same direction

48. **B –** Storage

49. **B –** Availability and age of the workforce

50. **B –** Economic certainty

51. **B –** Organize

© LionTutors 2019

52. **C –** (175, 275)

$$X^* = \frac{\sum_{i=1}^{I} W_i X_i}{\sum_{i=1}^{I} W_i} \qquad Y^* = \frac{\sum_{i=1}^{I} W_i Y_i}{\sum_{i=1}^{I} W_i}$$

$Total\ demand = 500 + 300 = 800$

$$X* = \frac{(100 * 500) + (300 * 300)}{800} = \frac{50{,}000 + 90{,}000}{800} = \frac{140{,}000}{800} = 175$$

$$Y* = \frac{(200 * 500) + (400 * 300)}{800} = \frac{100{,}000 + 120{,}000}{800} = \frac{220{,}000}{800} = 275$$

53. **D –** Break-bulk warehousing

54. **B –** A hub-and-spoke system

55. **C –** Spot stock warehousing

56. B – 87%

Perfect Order Index = (On time) * (Complete) * (Quality) * (Accurate invoice)

$$= \frac{(1{,}530 - 31)}{1{,}530} \times \frac{(1{,}530 - 59)}{1{,}530} \times \frac{(1{,}530 - 45)}{1{,}530} \times \frac{(1{,}530 - 68)}{1{,}530}$$

$$= \frac{1{,}499}{1{,}530} \times \frac{1{,}471}{1{,}530} \times \frac{1{,}485}{1{,}530} \times \frac{1{,}462}{1{,}530}$$

$$= 0.9797 \times 0.9614 \times 0.9706 \times 0.9556$$

$$= 0.8736 = 87.36\%$$

57. **C –** Activity D and B can be done simultaneously

© LionTutors 2019

Use the Following Work for the Next Two Solutions

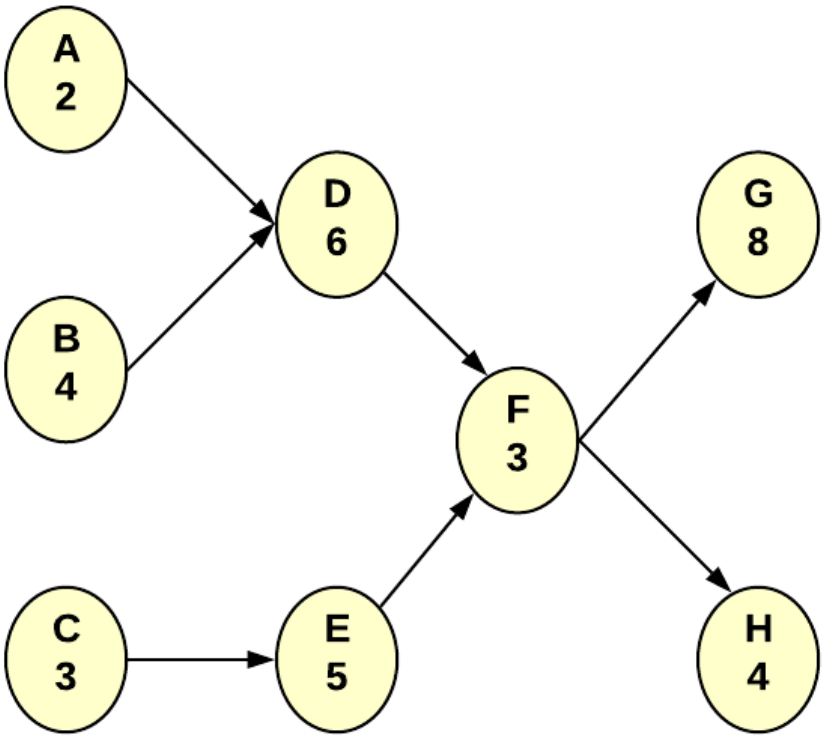

Network Paths
A-D-F-G = 2 + 6 + 3 + 8 = 19
A-D-F-H = 2 + 6 + 3 + 4 = 15
B-D-F-G = 4 + 6 + 3 + 8 = 21
B-D-F-H = 4 + 6 + 3 + 4 = 17
C-E-F-G = 3 + 5 + 3 + 8 = 19
C-E-F-H = 3 + 5 + 3 + 4 = 15

58. **D –** All of the above

59. **A –** Since activity E is not on the project's critical path, the company should not crash activity E

© LionTutors 2019